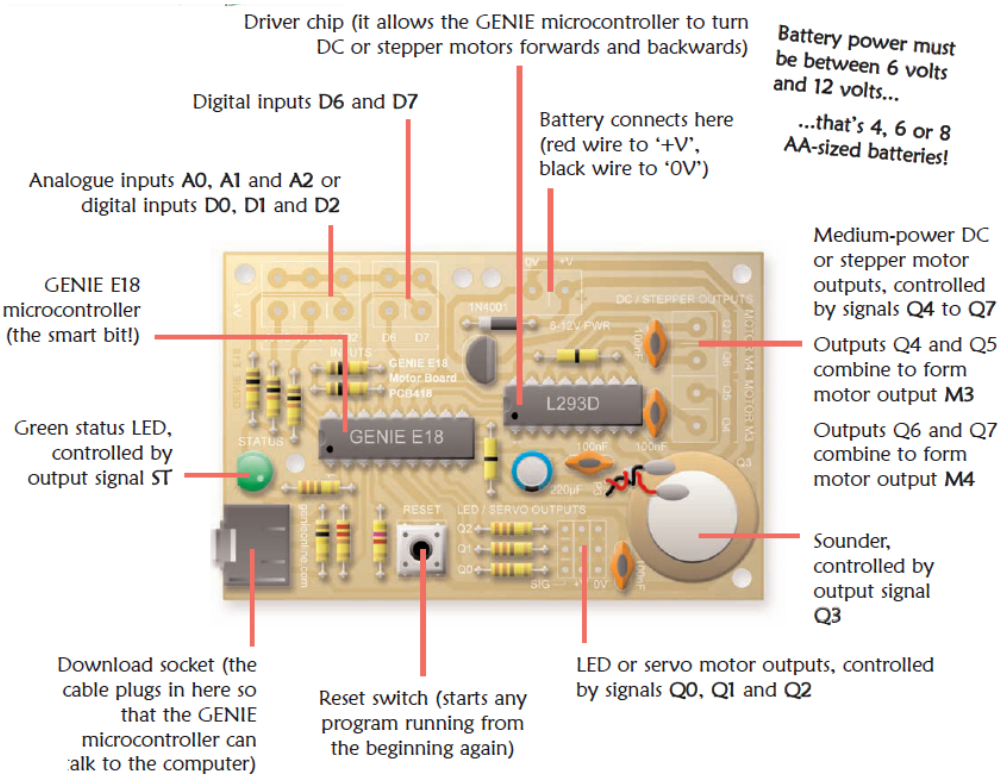
Driver chip (it allows the GENIE microcontroller to turn DC or stepper motors forwards and backwards)
Battery power must be between 6 volts and 12 volts...
...that's 4, 6 or 8 AA-sized batteries!
Digital inputs D6 and D7
Battery connects here (red wire to '+V', black wire to '0V')
Analogue inputs A0, A1 and A2 or digital inputs D0, D1 and D2
Medium-power DC or stepper motor outputs, controlled by signals Q4 to Q7
GENIE E18 microcontroller (the smart bit!)
Outputs Q4 and Q5 combine to form motor output M3
Outputs Q6 and Q7 combine to form motor output M4
Green status LED, controlled by output signal ST
Sounder, controlled by output signal Q3
Download socket (the cable plugs in here so that the GENIE microcontroller can talk to the computer)
Reset switch (starts any program running from the beginning again)
LED or servo motor outputs, controlled by signals Q0, Q1 and Q2
GENIE E18
L293D
STATUS
RESET
LED / SERVO OUTPUTS
DC / STEPPER OUTPUTS

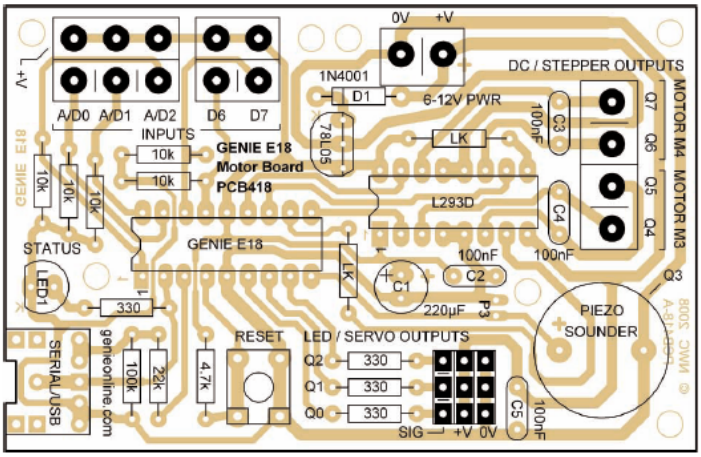
0V
+V
DC / STEPPER OUTPUTS
1N4001
D1
6-12V PWR
A/D0 A/D1 A/D2
D6 D7
INPUTS
GENIE E18
Motor Board
PCB418
78L05
LK
L293D
100nF
C3
C4
C2
C1
220µF
Q7 Q6 Q5 Q4
MOTOR M4 MOTOR M3
Q3
STATUS
LED1
330
GENIE E18
PIEZO SOUNDER
RESET
LED / SERVO OUTPUTS
Q2
Q1
Q0
SIG +V 0V
C5
SERIAL/USB
geniecnline.com
100k
22k
4.7k
10k